HushFrame Raft Connector Installation Guide

www.hushframe.com
sales@hushframe.com

55 Woodrock Rd, Bay 9,
Weymouth,
MA 02189
+1 (800) 809-HUSH

UPDATED AUGUST 2022

Description of the Raft

The RAFTs consist of two (2) wooden mounts separated and connected by a vibration-isolating silicone core which provides the decoupling. The longer and thinner STRUCTURE MOUNT attaches to the framing, typically studs or joists. The shorter and thicker FURRING MOUNT is where the furring attaches—either wood strapping or metal hat channel.

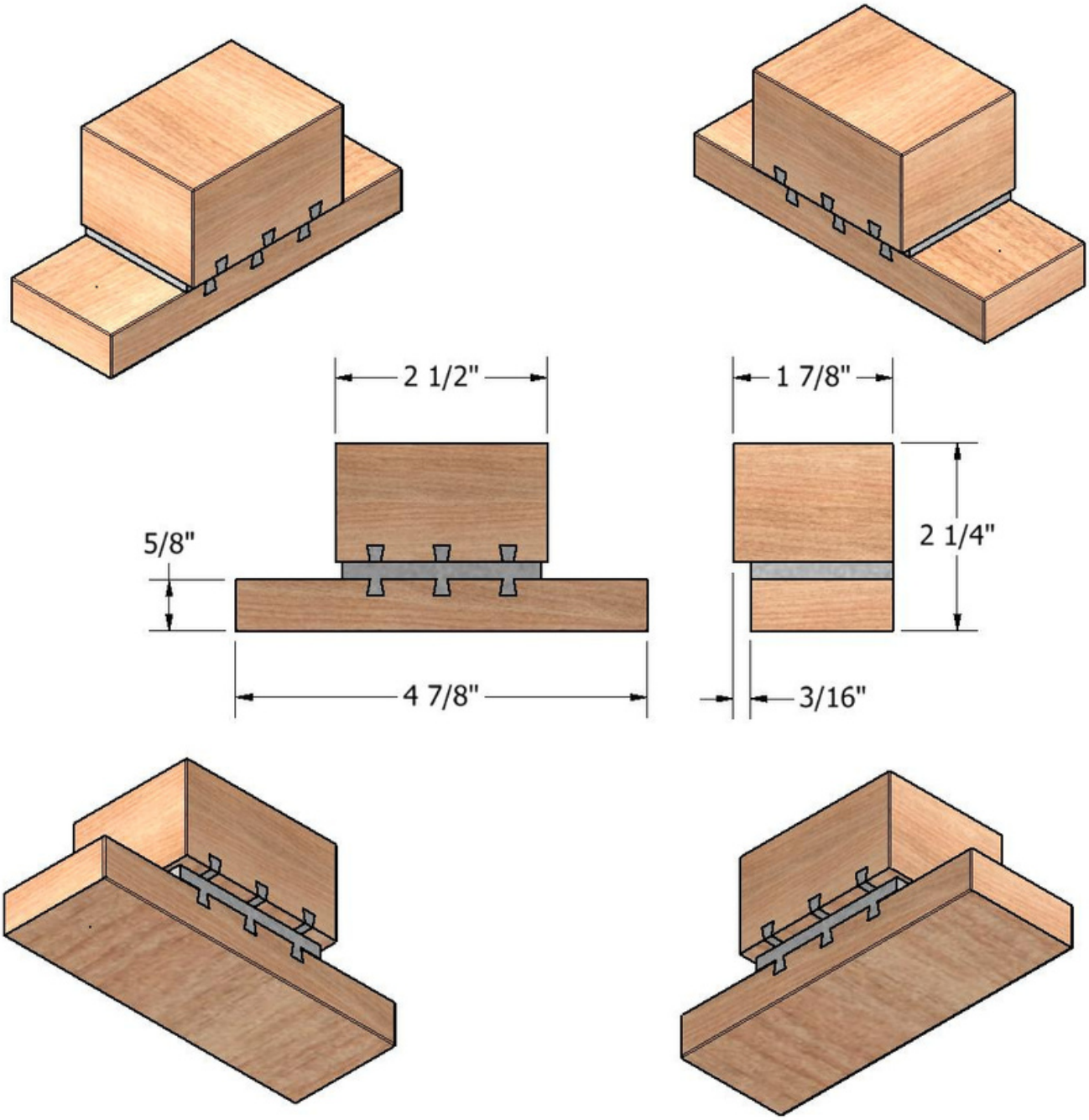

Hushframe Raft Series 300

Mounting alignment

IMPORTANT:

Be sure to align the long axis of the structure mounts with the front face edge of the framing members. The structure mounts should sit flush or proud of this edge to ensure the furring mount face maintains a minimum projection of 3/16” beyond the framing member face plane. (see illustration) Failure to observe this rule risks incidental contact of the back of the furring with the framing face which will short-circuit the decoupling and render the installation ineffective.

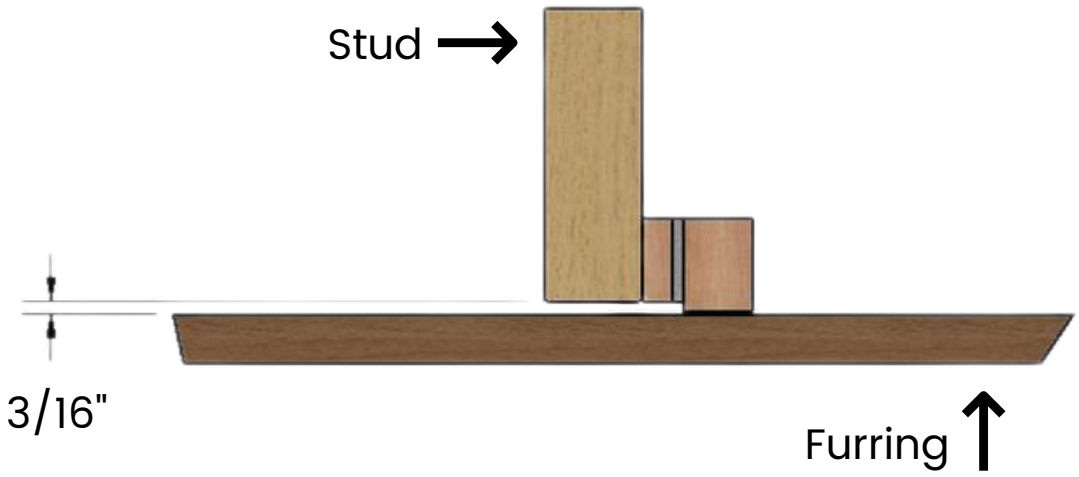

Illustration

Assembly surface must be flat

IMPORTANT:

IMPORTANT:

It is essential that the surface plane of the assembly be flat. Walls that are out of plumb and ceilings that are sloped are not necessarily problematic, but the mounting plane for the furring must be flat. This is a major concern, particularly when installing HushFrame during remodeling where old studs and joists have settled, twisted, and deflected. It's also important to keep an eye on this with new construction framing. We recommended that the installer run string lines alongside the furring runs to check for conformity. Stud or joist faces that fall behind the plane of the studs or joists on either side can have the situation corrected in one of two ways; the HushFrame Rafts are moved forward where the structure mounts protrude beyond the face plane by as much as 3/4" to close the gap. Alternatively, shim material is sandwiched between the Rafts and the furring to flatten it prior to fastening. (see illustrations on the next page)

Illustrations

No flat assembly surface

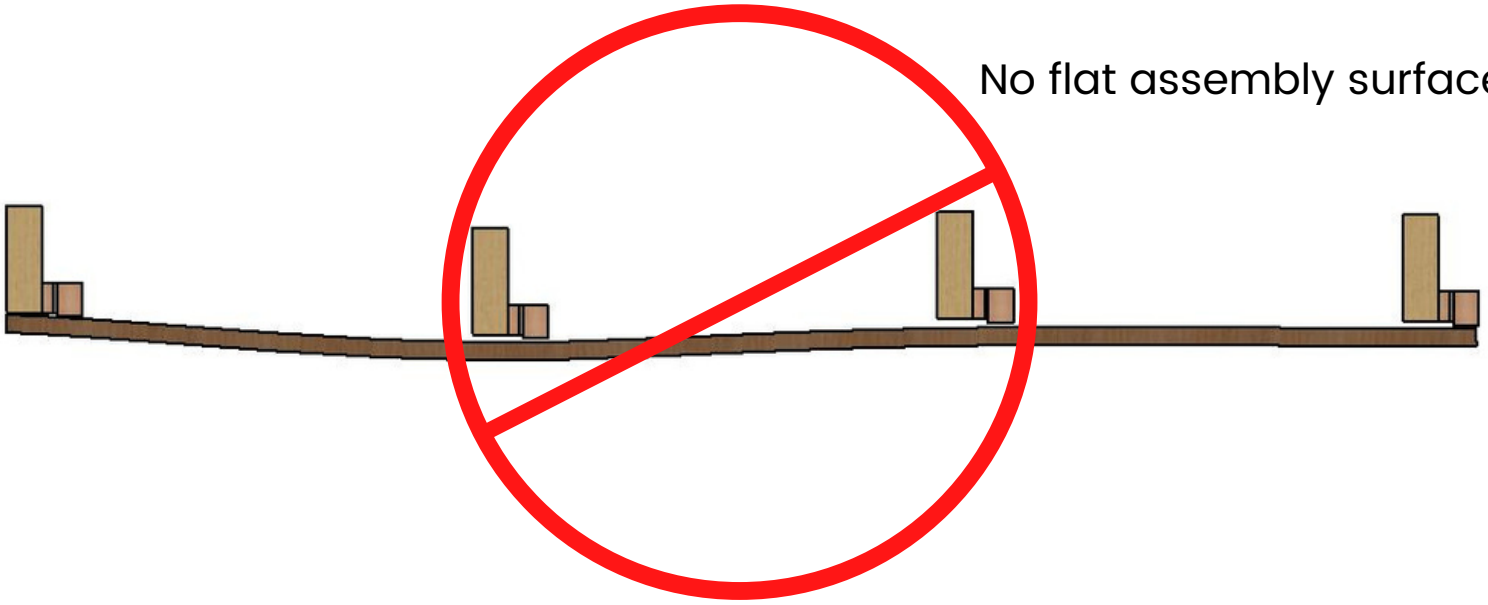

Rafts are moved forward

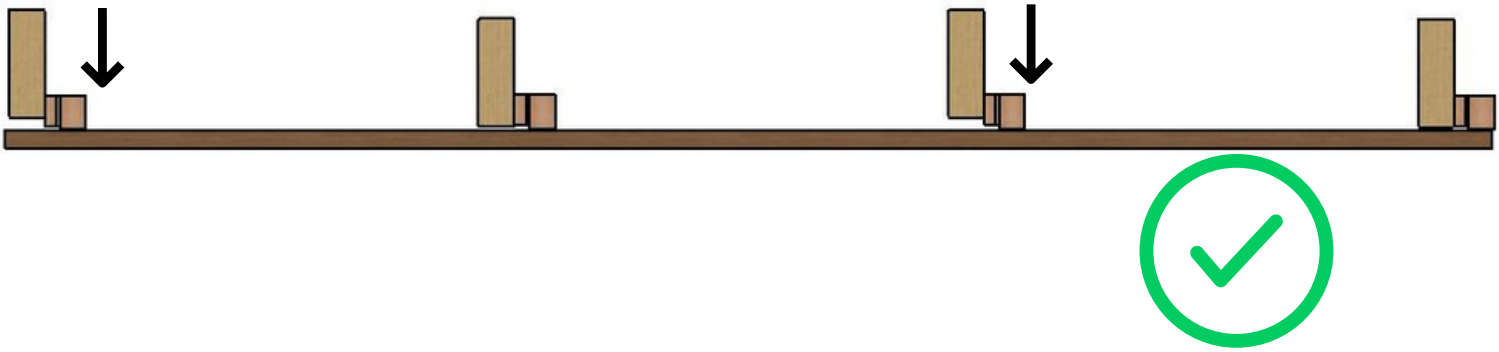

Shim material is added

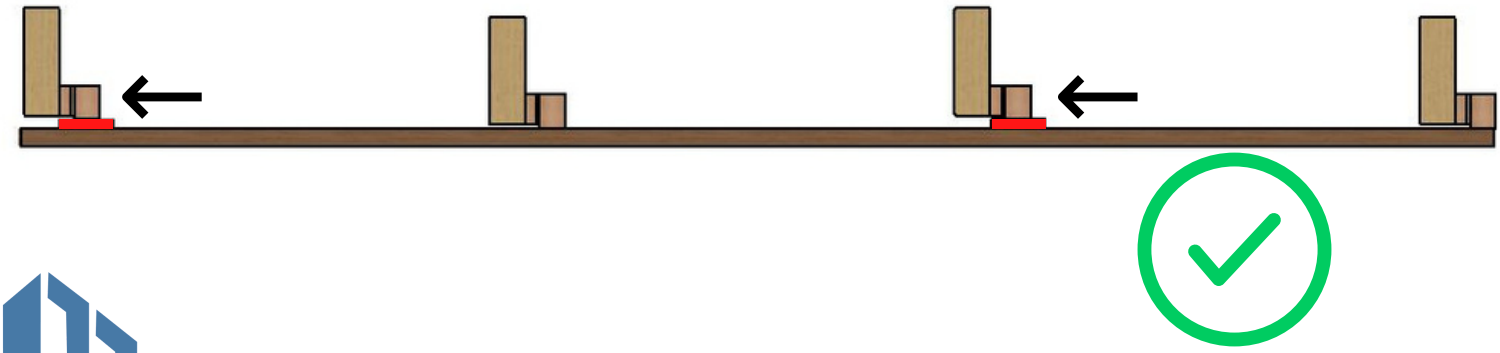

Illustrations

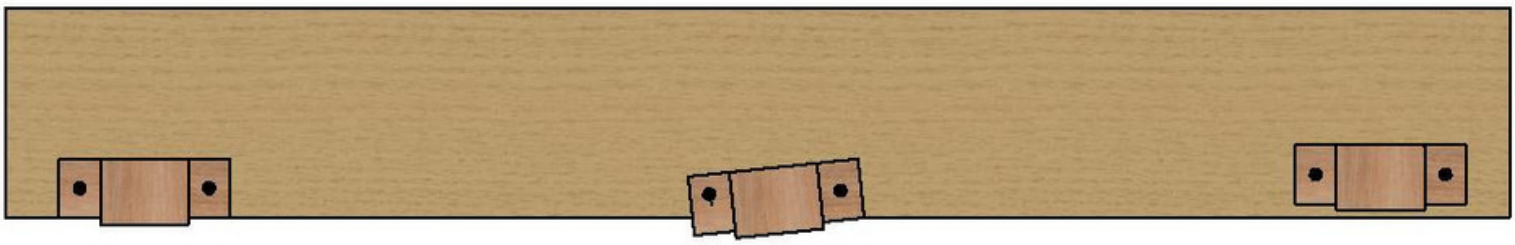

Twisted/ Rotated

Short Circuit

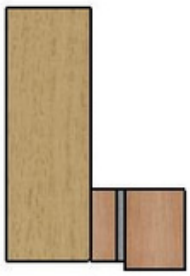

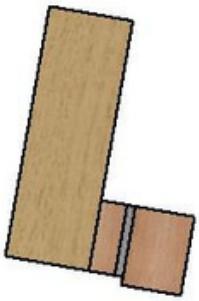

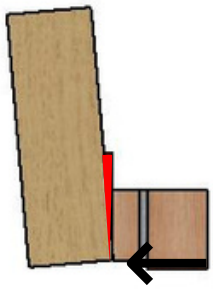

Shim material is added

Suspended ceiling installation

HushFrame Raft connectors can be used to decouple the wire hangers in suspended ceilings such as Chicago grid installations. Care must be taken to ensure that the Rafts are not overloaded or forced into a rotational situation. See Illustration

For any loading greater than 25 lbs. per Raft in this application, blocking should be installed on the sides of the joists to accommodate the Raft attachment in a perpendicular position relative to the joist and shifting the load into tension from shear.

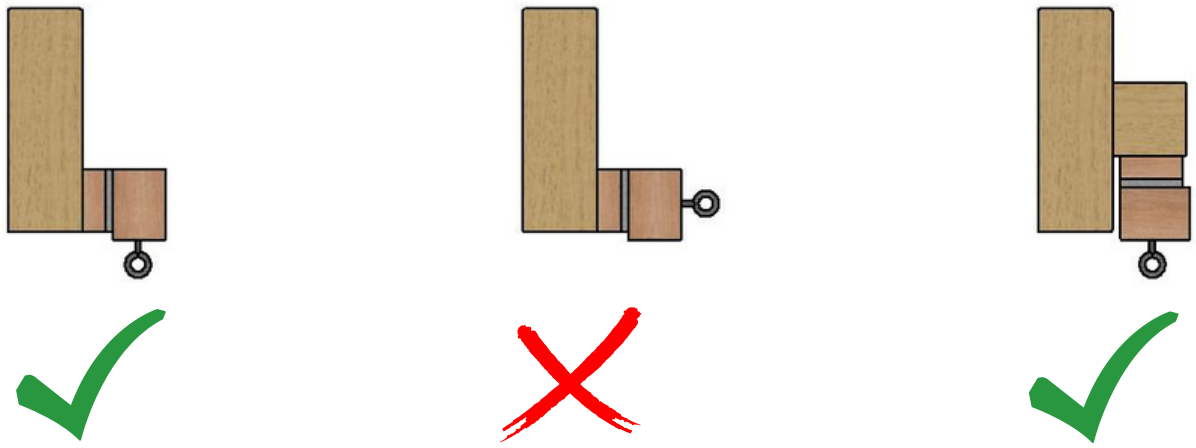

Rotational

Attaching Rafts to the structure

Each Raft should be attached to the structure with **TWO** fasteners through the legs of the mount, one on each side of the furring mount. We specify 1-5/8" course-thread bugle-head screws, **OR** alternatively, min. 1-1/2" long, medium crown staples, **OR** min. 6p ring shank sheathing nails.
NO ADHESIVES OF ANY SORT SHOULD BE USED.

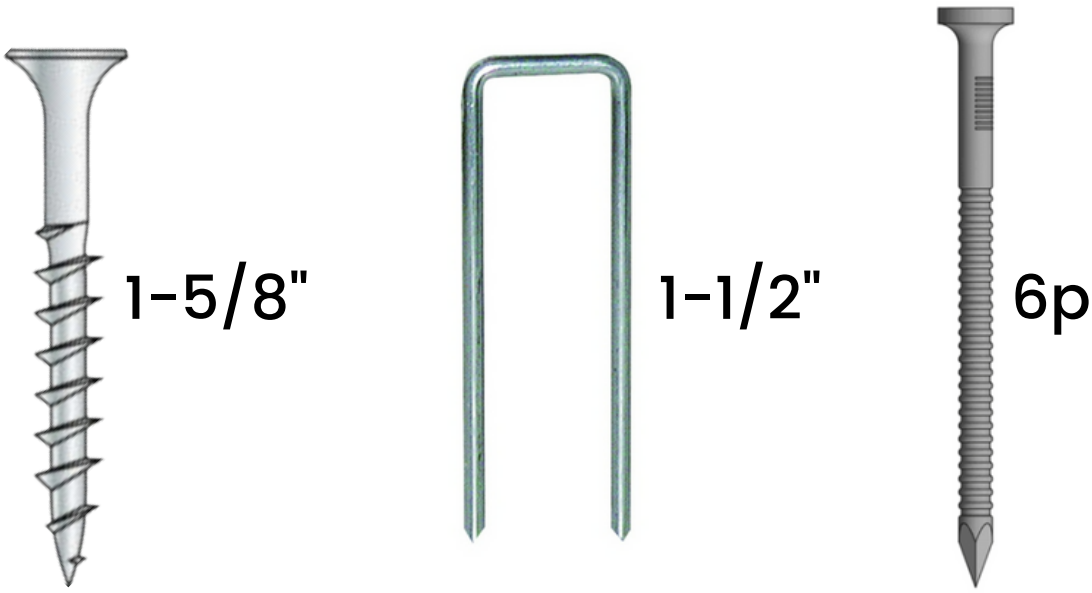

Attaching furring to the Rafts

When attaching the furring to the rafts, we specify one 2", or alternatively, two 1-5/8" course-thread bugle-head screws for wood furring, located in the center 2/3rds of the raft. (see illustration), and two 1-1/4" fine-thread self-tapping bugle-head screws for metal hat channel, one inserted through each shoulder at a 45-degree inward angle. (see illustration)

IMPORTANT:

Care must be taken to avoid damaging the rafts by attempting to attach furring with a pneumatic nail gun or utilizing oversized screws.

IMPORTANT:

It is essential that care be taken in the selection of wooden furring material attached to the Raft connectors. Only straight, flat, structurally solid dimension lumber should be used as furring. Nominal 1x3 is a common dimension, but 1x2 and 1x4 are also appropriate. Warped, checked, twisted, or split boards must not be used. (see illustration) Utilizing heavier dimension lumber for furring, such as 2x3 and 2x4 is not appropriate without detailed consultation with the factory technical staff. Similarly, certain special applications call for direct attachment of plywood panels directly to the Raft connectors without intermediate furring attachment. Such special applications are beyond the scope of this guide and should be directed to the factory technical staff.

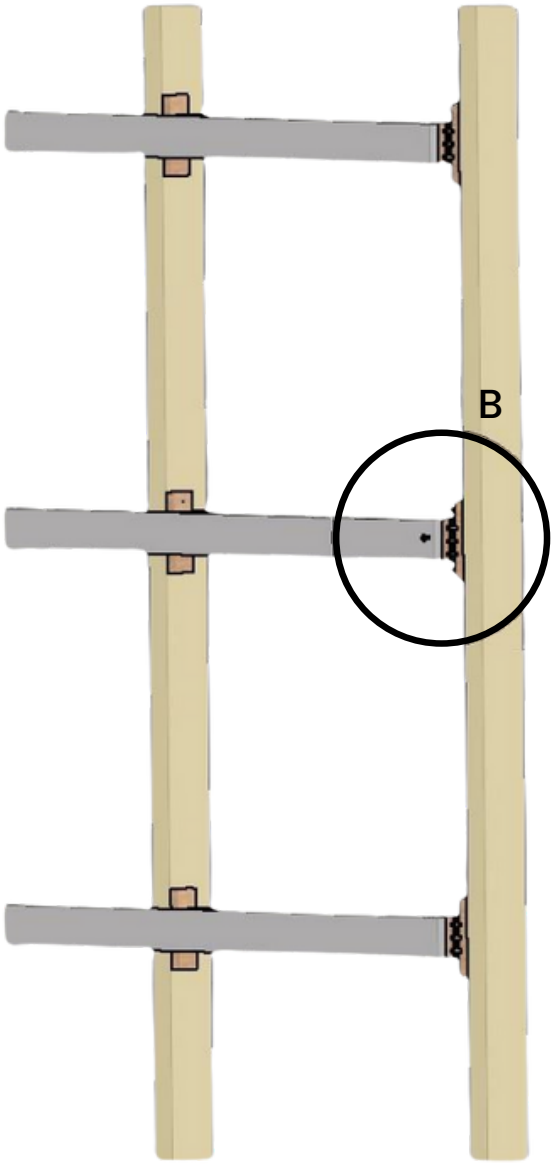

6x2-in
Bugle Head Coarse Thread
Drywall Screws

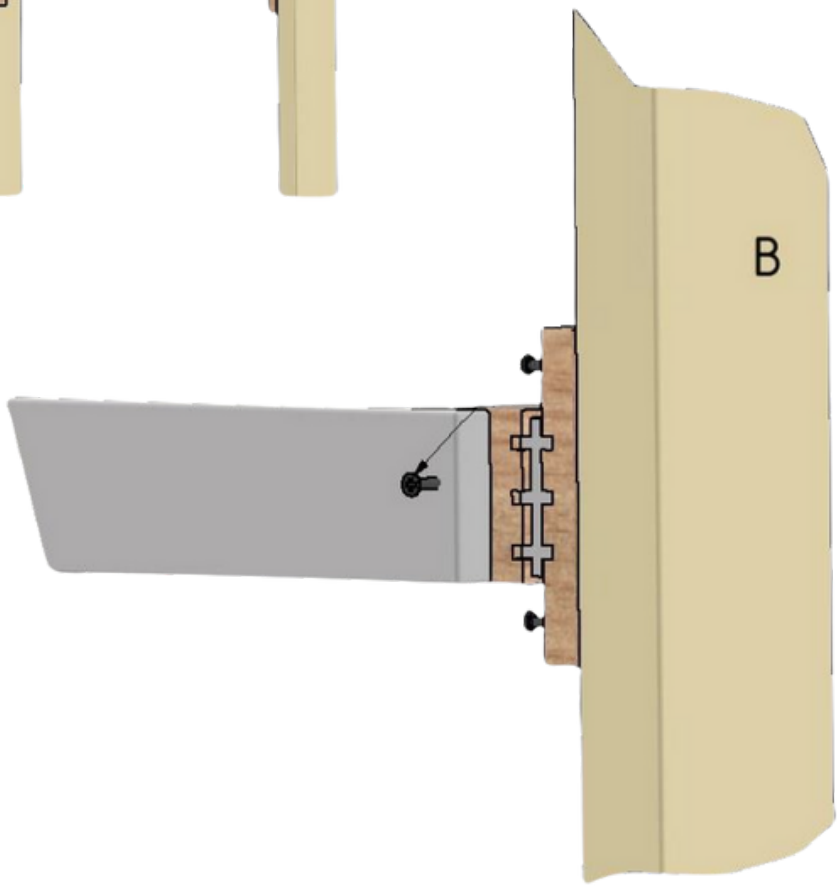

Illustration

No twisting of the Rafts is permitted

Rafts are very strong when properly installed and are designed to provide superior shear or tension loading strength.

IMPORTANT:

Rafts are not designed to resist rotational forces and should not be subjected to twisting. (see illustration) All initial furring attachment must ensure that no individual Raft is subjected to damaging stresses where the leverage of the unfastened length of a furring strip is allowed to hang or dangle beyond the initial Raft connections. Both ends of the furring must be held securely until fastened to the respective Rafts.

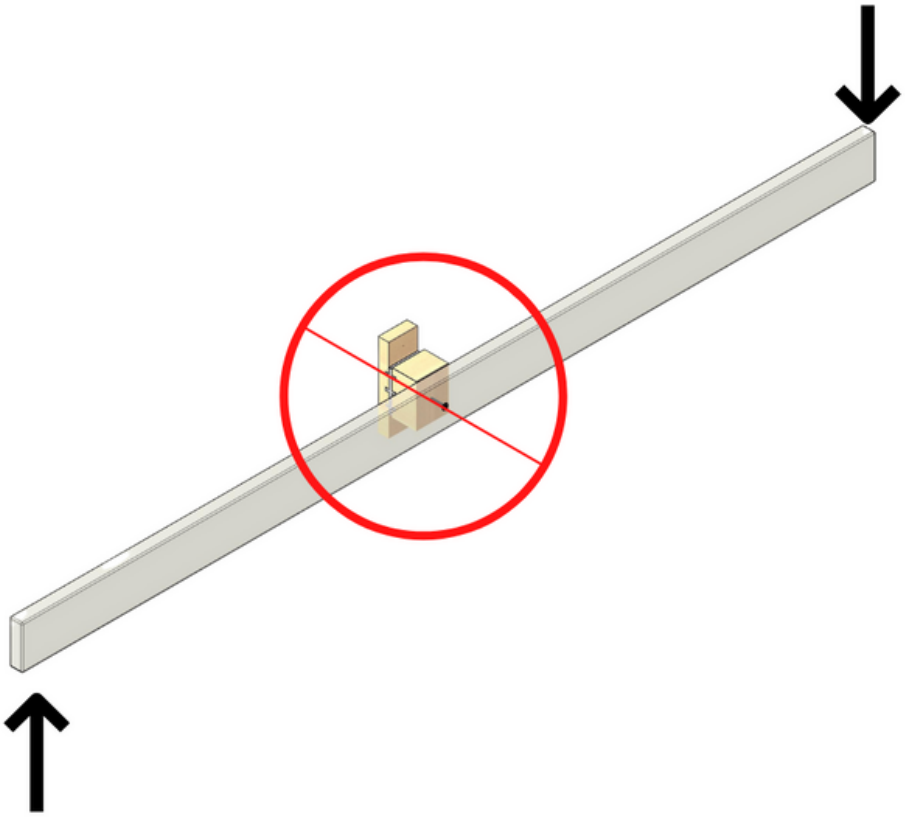

DO NOT ROTATE THE RAFTS!

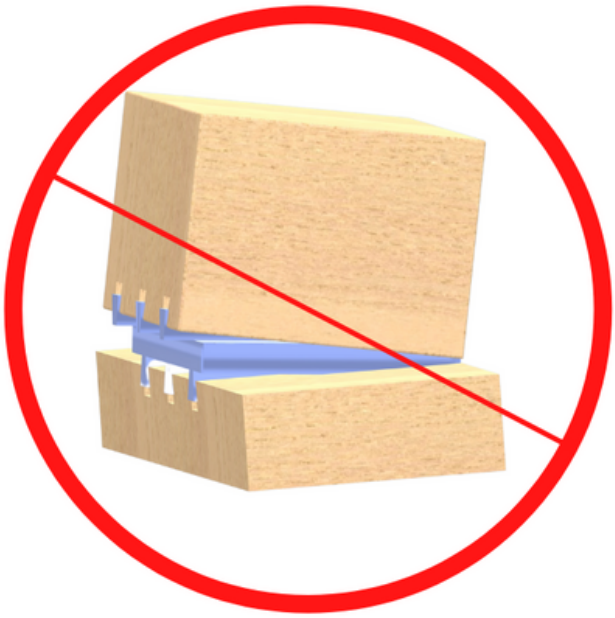

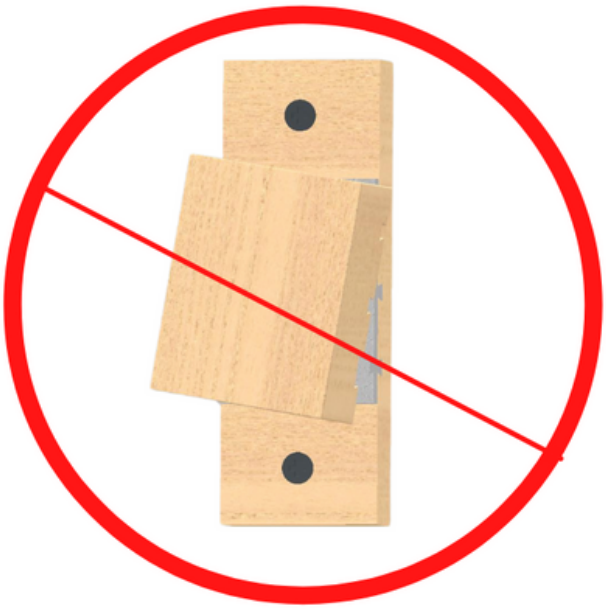

THE RAFTS ARE BUILT FOR SHEAR AND TENSION LOADING ONLY

Furring placement options

Furring is typically attached in rows that run perpendicular to the face of the studs or joists in an assembly as shown in the spacing and loading charts found at the end of this guide. The ends or sides of furring rows should not contact the adjacent assembly components. Leave a gap of at least 1/4" to avoid potential flanking paths and noise transit. This is particularly important for the top and bottom furring rows on wall installations and for the perimeter rows on ceiling installations.

While it is not an option with metal hat channel, there is also the option to install wood furring parallel to the framing members which would present the opportunity to recess the furring in the framing cavity to save space that would otherwise be lost. (see illustration) In this situation, care must be taken to prevent the furring strips from making contact with the top and bottom plates of wall assemblies. Where double bottom plates are installed, parallel recessed furring would likely be impractical due to the length of unsupported gypsum panel at the bottom of the wall.

Baseboard backer is typically 1x3 or 1x4 furring installed behind the bottom of the gypsum wall panels and attached to HushFrame Rafts that are mounted along the top of the bottom plates at the interior of the stud cavities as opposed to Rafts that are mounted along the sides of the studs. (see illustration)

Illustrations

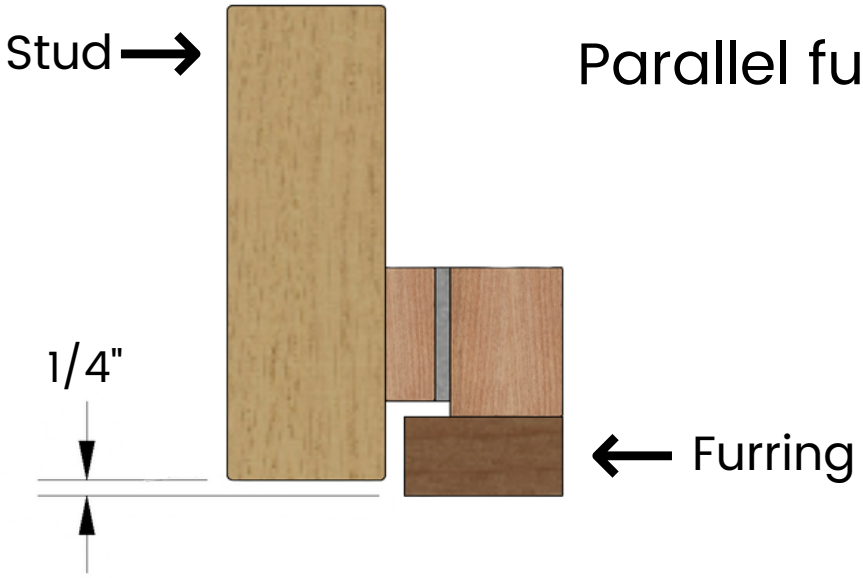

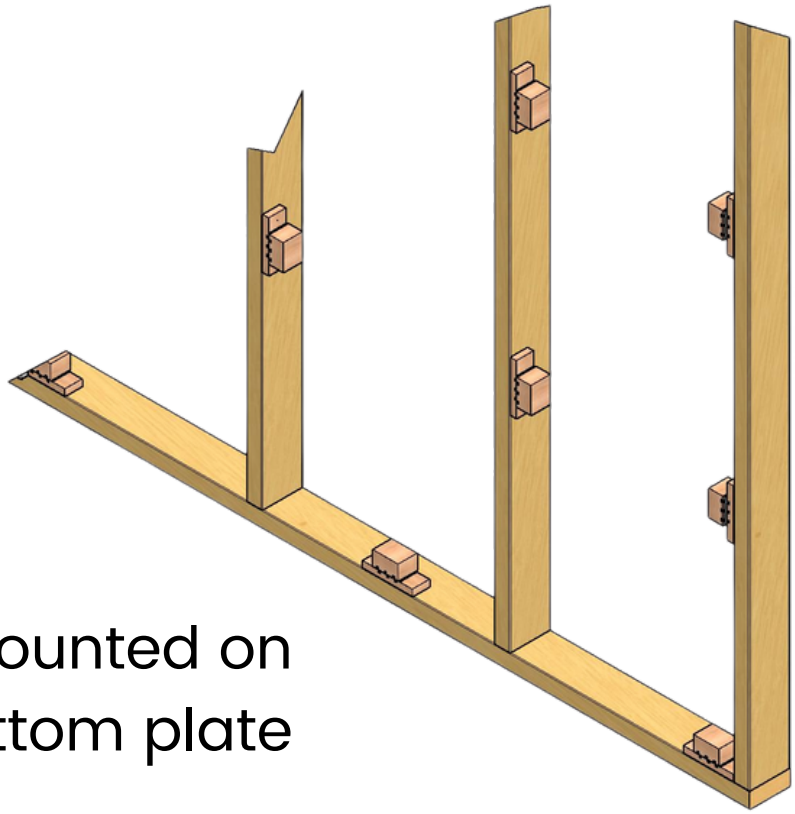

Rafts are mounted on the bottom plate

Install the furring early

Once the framing has been completed, it's best to next install the HushFrame Rafts and wood furring prior to the installation of mechanicals such as electrical boxes, exhaust fans, and HVAC ducts and registers. To prevent short circuiting and the creation of flanking paths, these mechanicals should be attached to the wood furring and not to the sides of studs and joists.

Non-bearing partitions under the furring

To ensure the most effective noise reduction in floor ceilings, where possible, install the HushFrame Rafts and furring once the bearing walls and floor joists are in place and then build the non-bearing partitions underneath, attaching the wall top plates to the underside of the furring.

Furring spanning dense headers and jambs

There are situations where framing spacing is too tight to accommodate the mounting of every Raft located along a furring row as detailed in this installation guide, such as with furring that spans across dense headers or terminates with unsupported ends across fat jamb construction at doors and windows. In this situation the furring is attached to as many Rafts as possible to maintain the installation grid and missing Rafts are substituted by drilling a 3/8” hole through the furring and extending into the framing behind by 3/4". Ensure the furring is temporarily secured 1/4” +/- from the face of the framing member and inject silicone paste through the hole in the furring so it floods into the frame hole and creates a small mass between the two. (see illustration) Allow the silicone to cure undisturbed for at least 24 hours.

Illustrations

Use soft cavity insulation

To eliminate what is known as “Air Spring”, where noise resonates and thrives in uninsulated stud bays and joist cavities, it is necessary to install some soft insulation material. Nothing outperforms common unfaced fiberglass batt insulation in the acoustic test laboratory. Blown-in cellulose is also a top performer and can effectively fill those difficult-to-access voids. Once the air spring is managed, the noise vibration energy travels through the structural frame components, and the decoupling with HushFrame Rafts defeats that movement.

Avoid dense materials and rigid insulation at all costs

Beware of dense insulation materials such as mineral fiber and furnace slag-based products that are marketed as superior acoustic insulation. When very dense materials are stuffed into stud and joist cavities, they can create a “bridge” that actually helps noise energy move across the space. Under no circumstance should rigid insulation be substituted for soft material in building assemblies requiring acoustic attenuation.

Hold gypsum panels a minimum of 1/8” from adjacent components

When installing gypsum panels onto the furring, avoid allowing the panels to make contact with adjacent assemblies. Wall panels should not contact ceiling framing or panels and ceiling panels should not contact wall framing or panels. Allow a gap of 1/8” or 3/16” in these intersections to prevent noise vibration that is moving through one assembly from simply crossing over to an adjacent one. Sliding the tips of shim shingles against the ends of the gypsum panels when installing is a quick and simple way to ensure proper spacing.

Fill gaps with non-hardening caulking

Prior to installing tape and joint compound, the intersection gaps should be filled with a non-hardening caulking that serves to prevent noise migration. Pure latex caulking is not appropriate due to its rigid composition once dried. A latex caulking that contains a percentage of silicone can be used as well as any silicone product sold in tubes as caulking or sealant.

Installation spacing patterns

HushFrame Rafts are installed in grid patterns and the attached furring strips are fastened in rows typically spaced 24" on center beginning at the bottom of wall assemblies or from the side of ceiling assemblies. Row spacing can be reduced to 16" on center or even 12" on center to accommodate extraordinary connected loading. The charts shown here are a general depiction of common installation patterns. For assemblies with studs or joists 16" on center, the most common pattern is furring rows 24" on center and Rafts spaced 32" staggered. For assemblies with studs or joists 24" on center, the most common patterns are furring rows 24" on center and Rafts spaced 24" or 48" staggered.

For questions regarding concentrated loading situations or complex mechanical device attachment, please contact the factory technical staff.

HUSHFRAME

HushFrame Raft Connectors

Installation spacing pattern 24-24-48

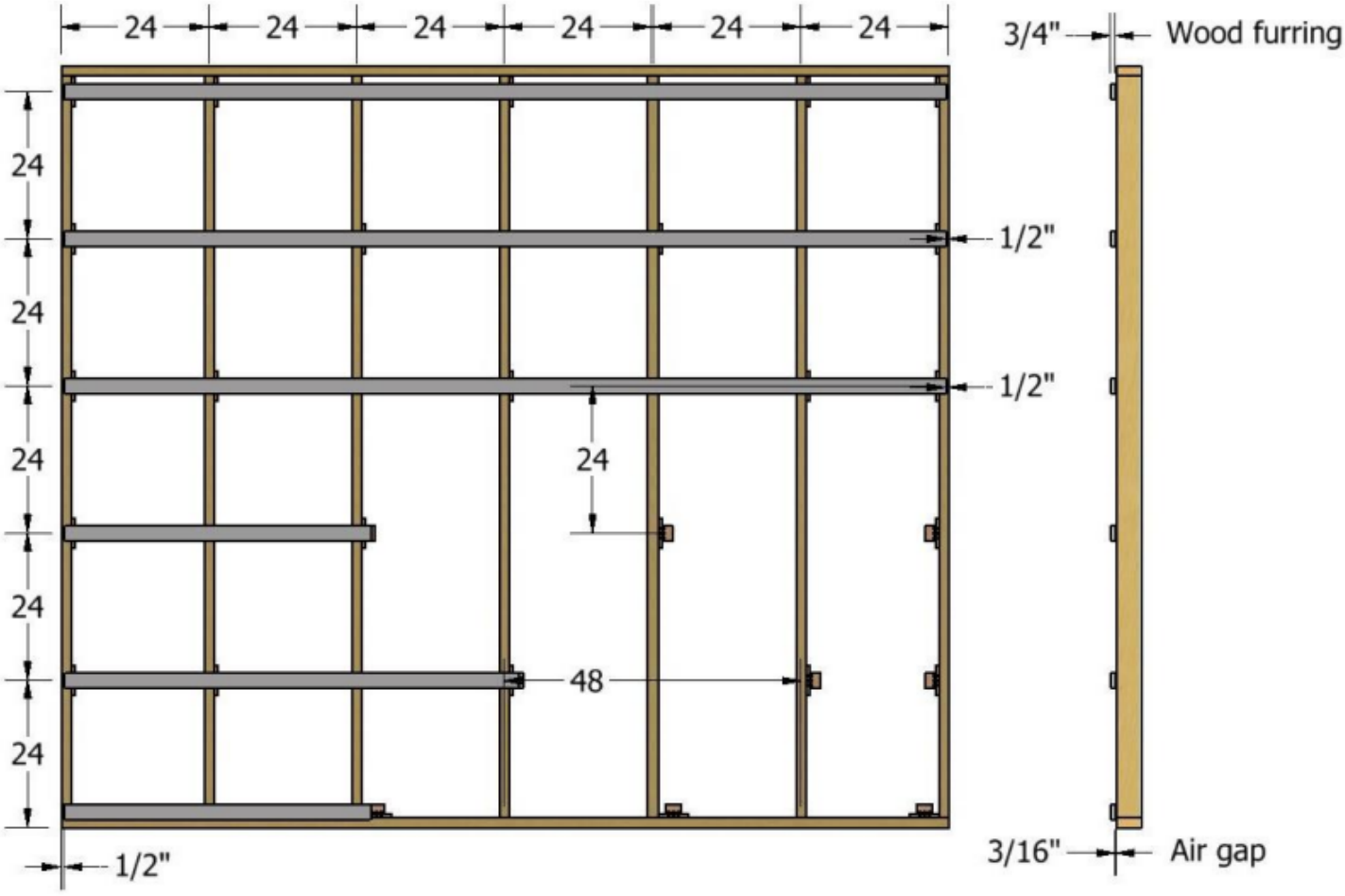

24" on center Wall Stud or Ceiling Joist Framing

Rows of Wood Furring or Metal Hat Channel - 24" on center
HushFrame Rafts installed 48" on center - staggered pattern

Requires one Raft per 4.4 sq. ft. of surface area
Recommended maximum attached load - 7 lbs. per sq. ft.
2 layers of 5/8" gypsum panels weigh 4.6 lbs. per sq. ft.

HUSHFRAME

HushFrame Raft Connectors

Installation spacing pattern 24-24-24

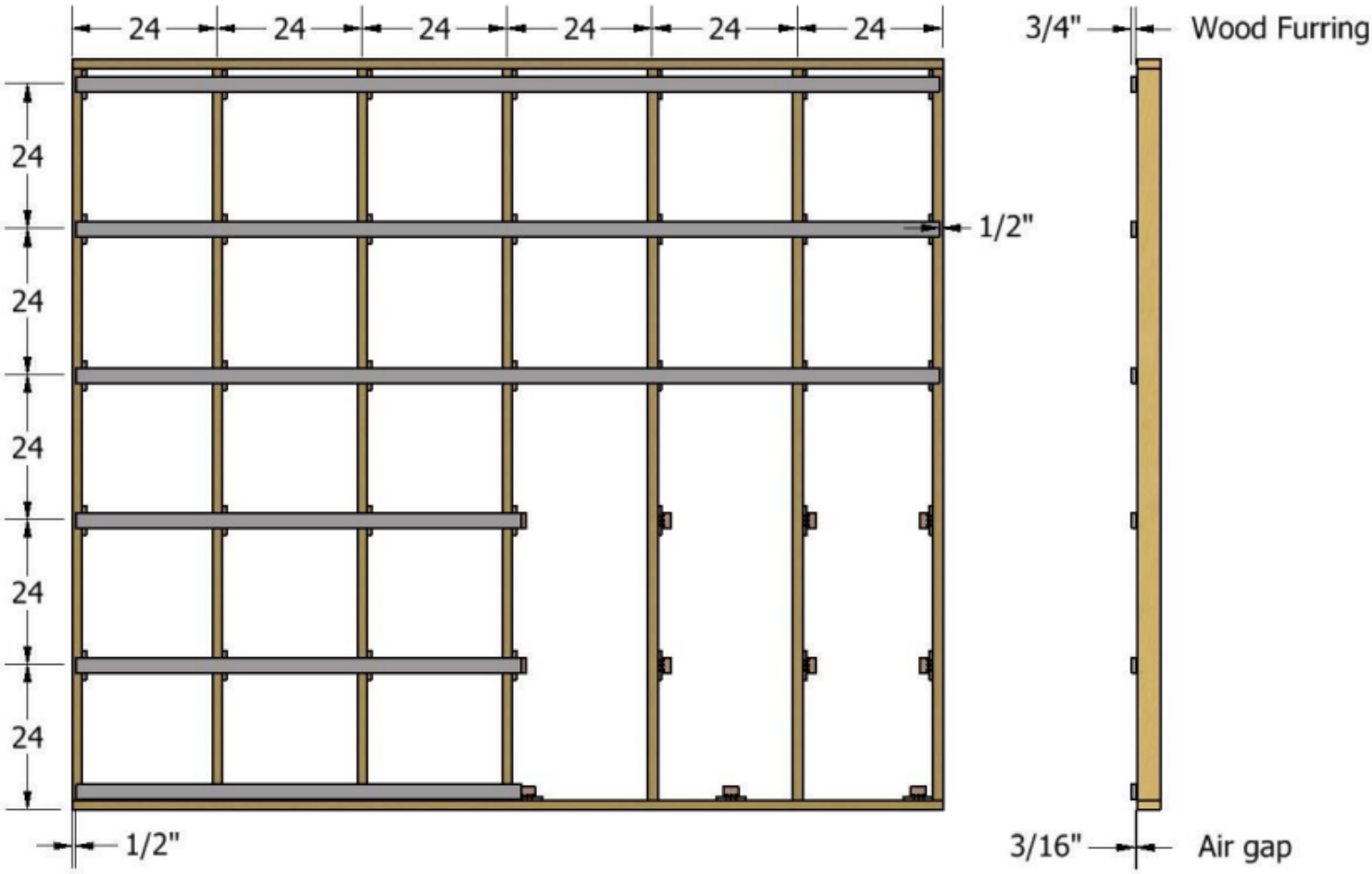

24" on center Wall Stud or Ceiling Joist Framing

Rows of Wood Furring or Metal Hat Channel - 24" on center
HushFrame Rafts installed 24" on center

Requires one Raft per 2.9 sq. ft. of surface area
Recommended maximum attached load - 12.5 lbs. per sq. ft.
2 layers of 5/8" gypsum panels weigh 4.6 lbs. per sq. ft.

HUSHFRAME

HushFrame Raft Connectors

Installation spacing pattern 24-16-24

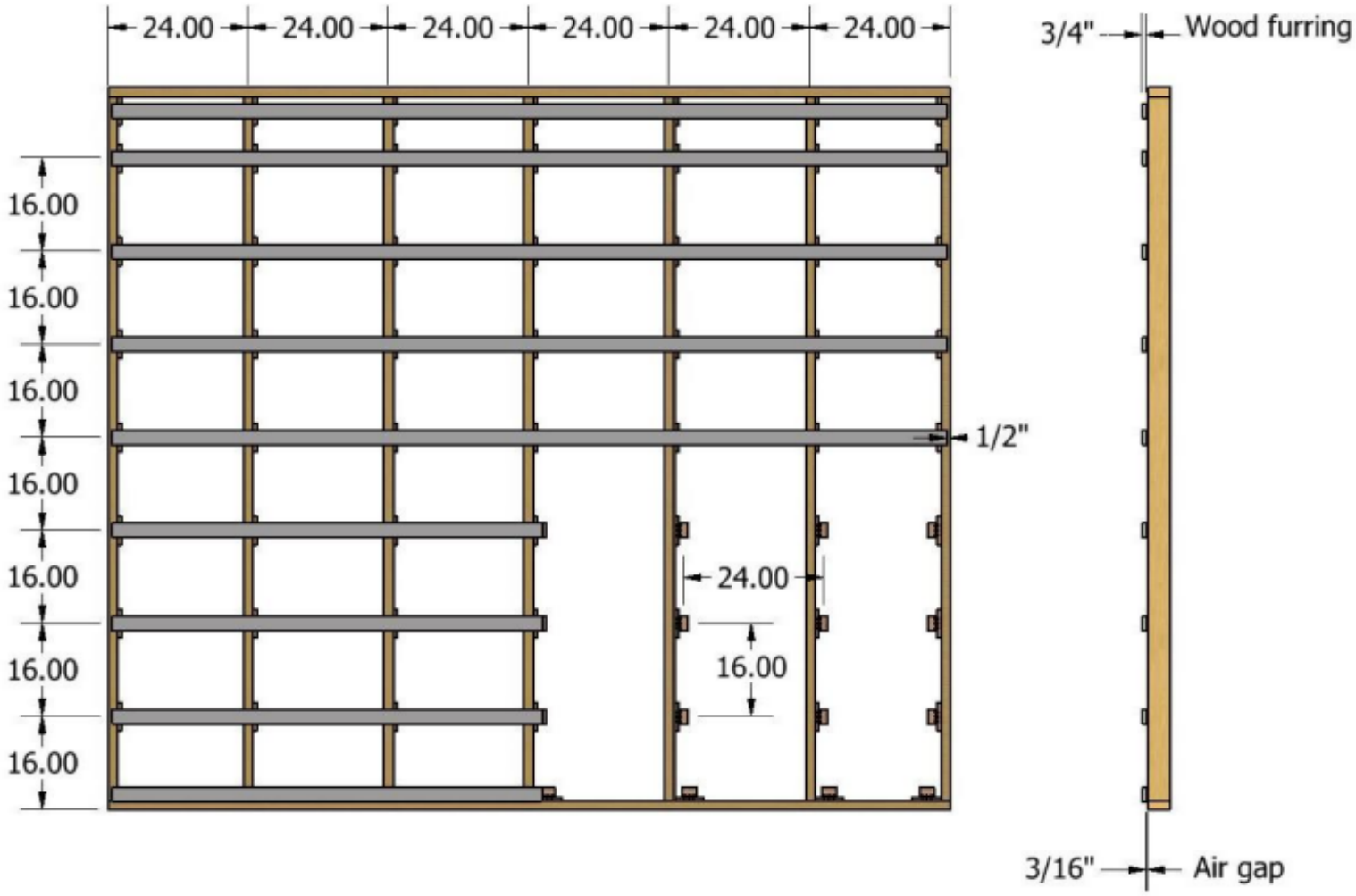

24" on center Wall Stud or Ceiling Joist Framing

Rows of Wood Furring or Metal Hat Channel - 16" on center
HushFrame Rafts installed 24" on center

Requires one Raft per 2.15 sq. ft. of surface area
Recommended maximum attached load - 18.75 lbs. per sq. ft.
2 layers of 5/8" gypsum panels weigh 4.6 lbs. per sq. ft.

HUSHFRAME

HushFrame Raft Connectors

Installation spacing pattern 16-24-48

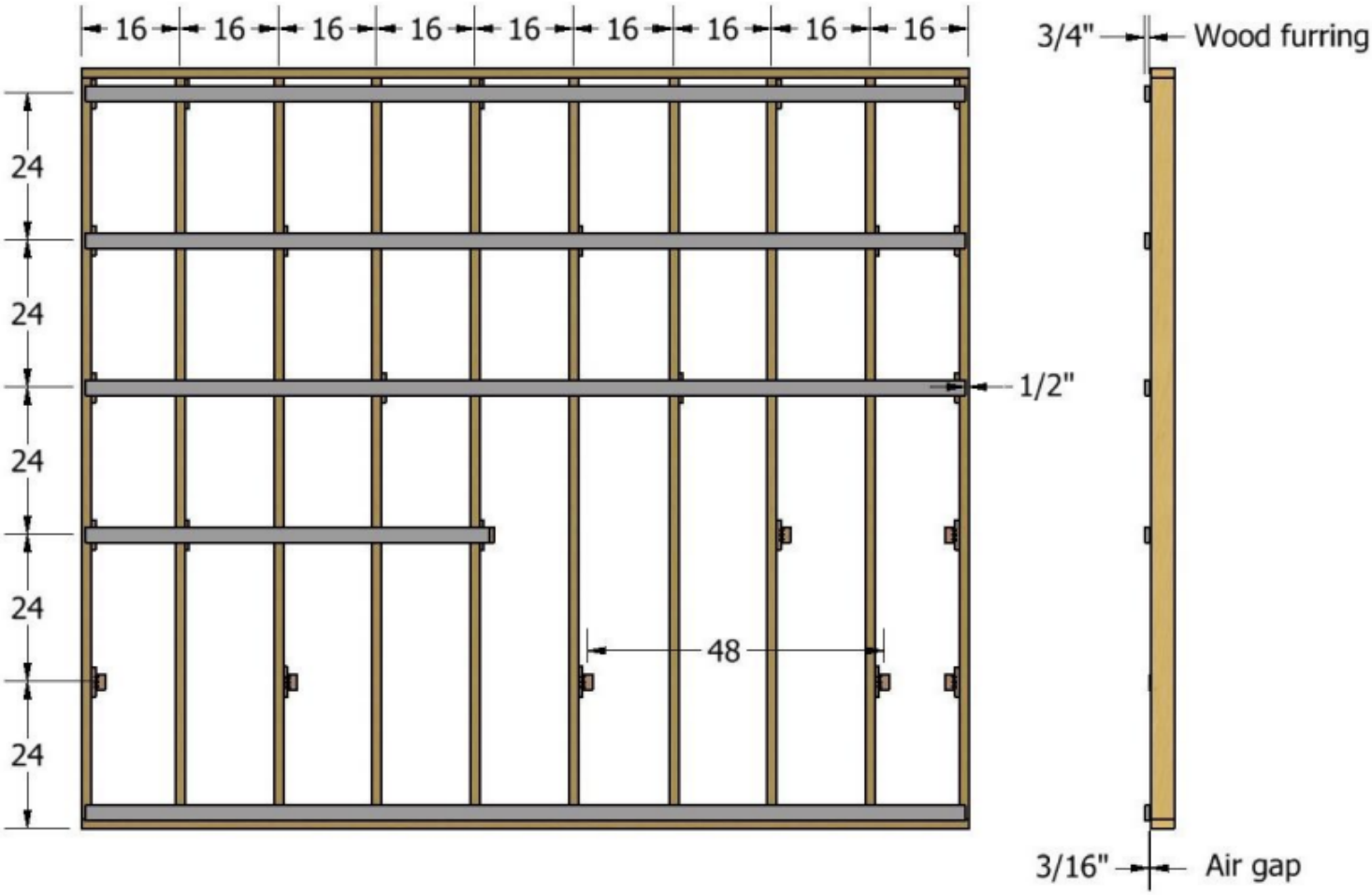

16" on center Wall Stud or Ceiling Joist Framing

24" on center rows of Wood Furring or Metal Hat Channel
HushFrame Rafts installed 48" on center - staggered pattern

Requires one Raft per 4.3 sq. ft. of surface area
Recommended maximum attached load - 7.65 lbs. per sq. ft.
2 layers of 5/8" gypsum panels weigh 4.6 lbs. per sq. ft.

HUSHFRAME

HushFrame Raft Connectors

Installation spacing pattern 16-24-32

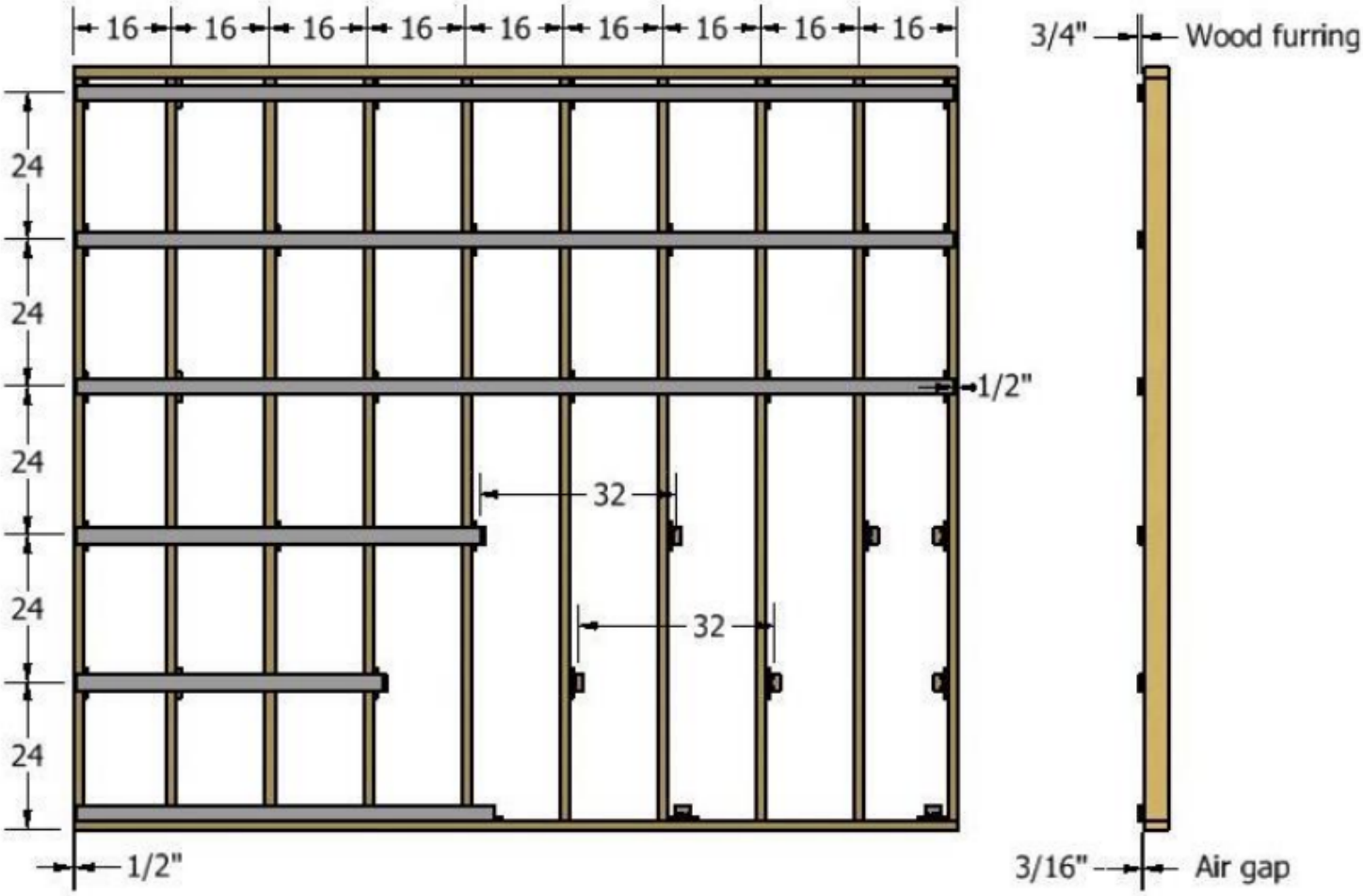

16" on center Wall Stud or Ceiling Joist Framing

24" on center rows of Wood Furring or Metal Hat Channel
HushFrame Rafts installed 32" on center - staggered pattern

Requires one Raft per 3.3 sq. ft. of surface area
Recommended maximum attached load - 10 lbs. per sq. ft.
2 layers of 5/8" gypsum panels weigh 4.6 lbs. per sq. ft.

HUSHFRAME

HushFrame Raft Connectors

Installation spacing pattern 16-24-16

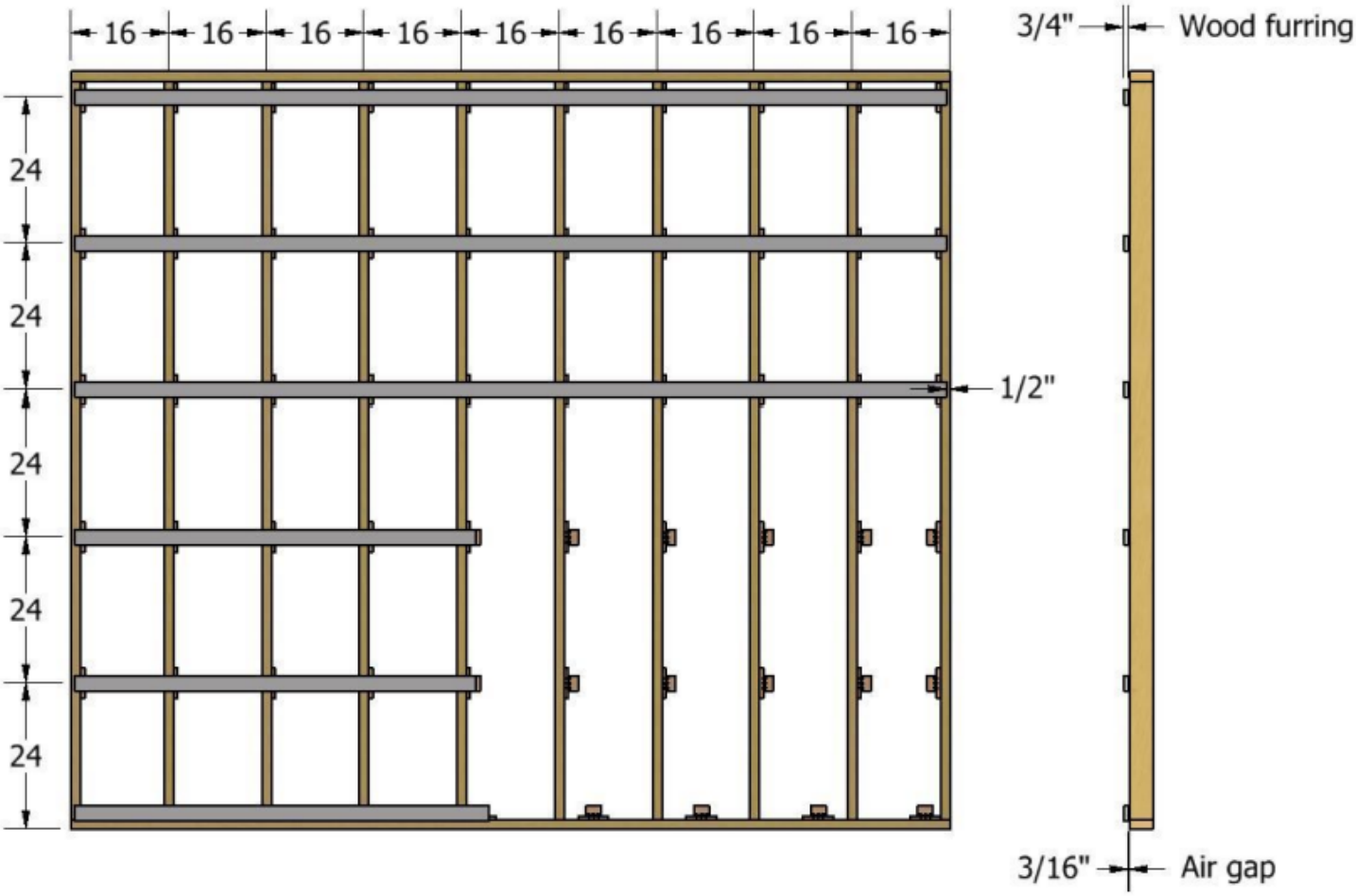

16" on center Wall Stud or Ceiling Joist Framing

16" on center rows of Wood Furring or Metal Hat Channel
HushFrame Rafts installed 16" on center

Requires one Raft per 2 sq. ft. of surface area
Recommended maximum attached load - 18.75 lbs. per sq. ft.
2 layers of 5/8" gypsum panels weigh 4.6 lbs. per sq. ft.

HUSHFRAME

HushFrame Raft Connectors

Installation spacing pattern 16-16-16

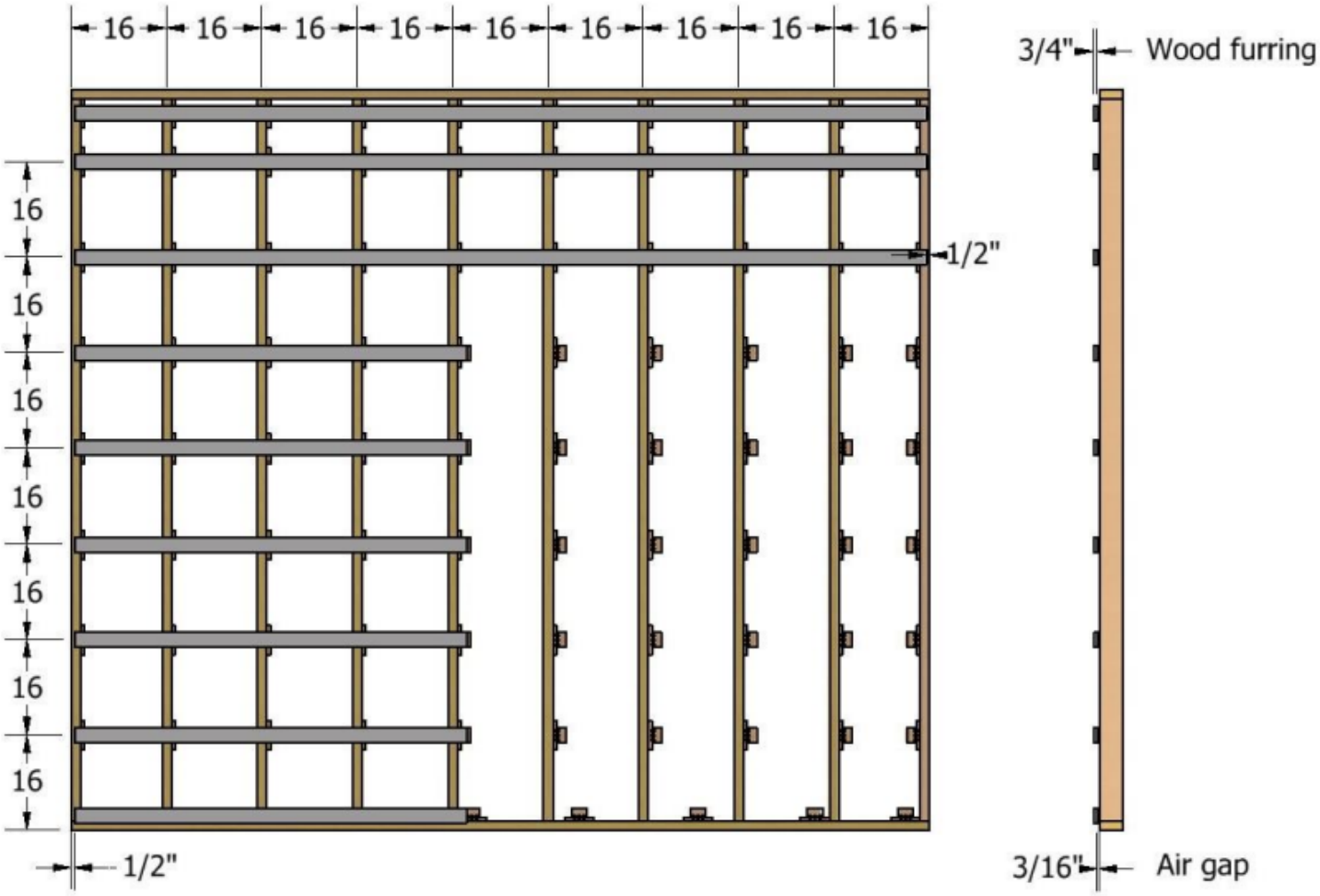

16" on center Wall Stud or Ceiling Joist Framing

16" on center rows of Wood Furring or Metal Hat Channel
HushFrame Rafts installed 16" on center

Requires one Raft per 1.3 sq. ft. of surface area
Recommended maximum attached load - 28 lbs. per sq. ft.
2 layers of 5/8" gypsum panels weigh 4.6 lbs. per sq. ft.